Powering a Sustainable Future

with Smart & Reliable Batteries

Website | Tiktok | Youtube

BSL NEW ENERGY TECHNOLOGY CO., LTD.

www.bsl-battery.com
Call: +86-752-2819-469
E-mail: inquiry@bsl-battery.com

8F, Building D-2-3,1F, Building D-2-3,8F, Building D-2-2, No.6, Xingyuan NorthRoad, Starting AreaChina-Korea Huizhou Industrial Park, Zhongkai District, Huizhou City, Guangdong, P.R. China

BSL New Energy Technology European B.V.

www.bsl-battery.com
Call: +31 6 27 58 46 03 | +31 627 583 933
E-mail: inquiry@bsl-battery.com

Jollemanhof 22, 1019GW Amsterdam, Netherlands

BSL NEW ENERGY(USA) TECHNOLOGY CO., LTD.

www.bsl-battery.com
Call: +1(520)861-3970
E-mail: sales@bslbattery.us

1036 Jacobson Road Suite #200 Garland TX 75042

BSLバッテリー 株式会社

www.bsl-battery.com
Call: +81-70-1529-6797
E-mail: inquiry@bsl-battery.com

〒114-0002 東京都北区王子4丁目26—2 2F

www.bsl-battery.com

POWERING A SUSTAINABLE FUTURE

with Smart & Reliable Batteries

BSLBATT®

C&I ESS

MatchBox HVS

High Voltage Stackable System

MatchBox HVS stackable battery features a modular design, with each pack offering 102.4V and 52Ah, allowing for flexible combinations to meet varying capacity requirements. Designed specifically for three-phase residential energy storage systems, it provides stable and efficient power output while balancing performance and safety. It is an ideal solution for homes seeking high performance and high availability.



- Cobalt Free Lithium Iron Phosphate (LFP) Battery
- Built-in fire protection system (optional)
- Max.5 MatchBox HVS in Parallel
- Modular Design, Plug and Play
- CCS Standard Battery Module
- 10 Years Warranty, > 6000 Cycles
- 15.97kWh - 186.35kWh capacity range
- 307.2V - 716.8V Voltage Range

System Demonstration

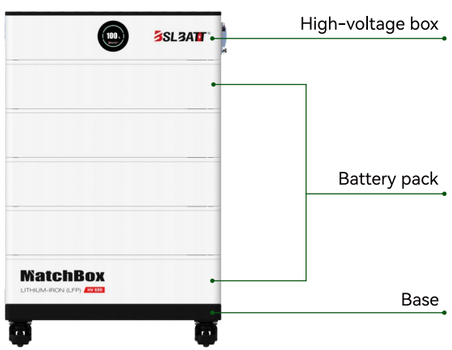

System Layout

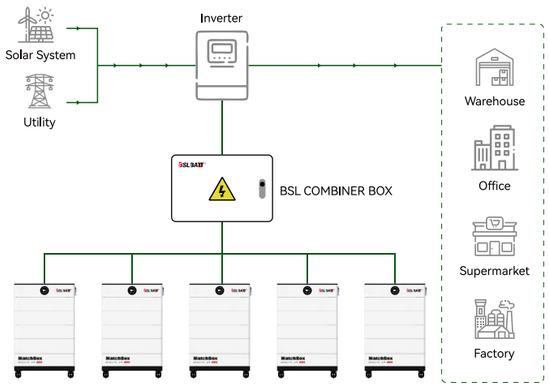

Model	HVS3	HVS4	HVS5	HVS6	HVS7
Rated voltage (V)	307.2	409.6	512	614.4	716.8
Cell Model (LFP-3.2V)	52Ah				
Battery Pack	32S1P 102.4V 5.32kWh				
System configuration	96S1P	128S1P	160S1P	192S1P	224S1P
Number of Modules	3	4	5	6	7
Nominal capacity(kWh)	15.97	21.29	26.62	31.94	37.27
Charge Upper Voltage (V)	336.0	448.0	560.0	672.0	784.0
Discharge Lower Voltage (V)	268.8	358.4	448.0	537.6	627.2
Recommended current	26A				
Rated DC Power (kW)	7.98	10.64	13.31	15.97	18.63
Maximum charging current	48A				
Maximum discharging current	52A				
Dimensions(W*D*H,mm)	665*370*732(±5)	665*370*881(±5)	665*370*1031(±5)	665*370*1180(±5)	665*370*1330(±5)
Weight	160kg±3%	205kg±3%	250kg±3%	295kg±3%	340kg±3%
Communication protocol	CAN BUS(Baud rate @500Kb/s @250Kb/s)/Mod bus RTU(@9600b/s)				
Host software protocol	CAN BUS(Baud rate @250Kb/s)/Wifi/Bluetooth				
Operation temperature range	Charge:0~50℃				
	Discharge:-10~55℃				
Cycle life	>6000 cycles @95% DOD				
Protection level	IP65				
Storage tempearture	0℃~35℃				
Storage humidity	10%~90%RH (No Condensation)				
Internal impedance	≤1Ω				
Warranty	10 years				
Service life	>15 years				
Multi-group	Max. 5 systems in parrallel				
Certification					
Safety	IEC62619/IEC62477/IEC62040/CE/CEC Listed				
Hazardous materials classification	Class 9				
Transportation	UN38.3				

ESS-GRID HV PACK

High Voltage ESS Solutions

Enhance your energy storage efficiency with the flexible, expandable ESS-GRID HV PACK. This rack-mounted battery system is purpose-built for high-voltage applications, including three-phase residential systems, commercial and industrial storage, microgrids, and UPS. Each battery module operates at 57.6V 135Ah, with scalable capacity through series and parallel configurations to meet your project's energy needs.



- 38.9kWh - 544.3kWh Capacity Range
- 252.0V - 882.0V Voltage Range
- Cobalt Free Lithium Iron Phosphate (LFP) Battery
- Built-In Fire Protection System (Optional)
- Max. 5 ESS-GRID HV Pack In Parallel
- Modular Design, Plug And Play
- 10 Years Warranty, > 6000 Cycles
- Ideal For Home, Solar Farm, School, Hospital, Factory Use

System Demonstration

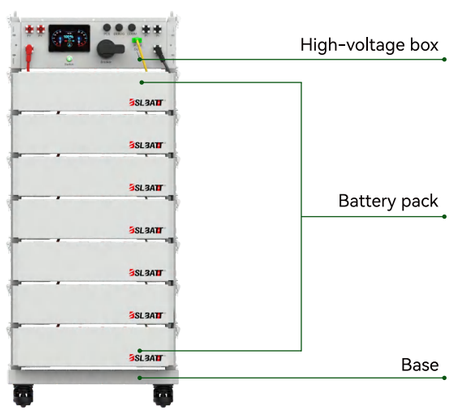

System Layout

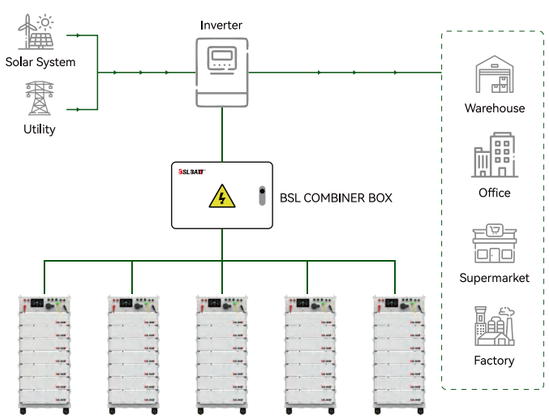

Model	HV PACK 5	HV PACK 8	HV PACK 11	HV PACK 14
Battery Pack				
Cell Capacity	3.2V 135Ah			
Cell Material	Lithium Iron Phosphate (LiFePO4)			
Assembly Method	18S1P			
Rated Voltage	57.6V			
Rated Current	68A			
Rated Energy	7.78kWh			
Maximum Charge and Discharge Rate	1C			
Wight	68kg±1%			
Cooling Method	Natural Cooling			
Battery Cluster				
Number of Battery Packs	5	8	11	14
System Rated Voltage	288V	460.8V	633.6V	806.4V
Operating Voltage Range	252.0V ~ 315.0V	403.2V ~ 504.0V	554.4V ~ 693.0V	705.6V ~ 882.0V
Weight(+3%)	38.9 kWh	62.2 kWh	85.5 kWh	108.9 kWh
Maximum Charge Current	120A			
Maximum Discharge Current	120A			
Number of Cycles	6000 cycles @ 80% DOD			
Other Parameters				
Operating Temperature	Charge: 0~55℃			
	Disharge: -20~55℃			
Storage Temperature	0℃~35℃			
Operating Humidity	10%~90%RH (No Condensation)			
Altitude	3000m			
Installation Environment	Indoor			
Fire Protection	Option			
Communication Protocol	CAN/ModBus			
Warranty	10 Years			
Lifespan	> 15 Years			
Protection Level	IP20			
Dimensions(W*D*H,mm)	590*713*1118 (±5)	590*713*1568 (±5)	590*713*2018 (±5)	1180*713*1418 (±5)
Weight(+3%)	Base: 18kg I Single Pack: 68kg I High voltage Box: 20kg			
Transport Certificates	UN38.3, MSDS			
Safety Certifications	CE, IEC 62619, IEC 62040, IEC 62477, CEC Listed			

Note:When the number of battery pack stacking layers is too high, it needs to be divided into two columns.

ESS-BATT R60

High Voltage ESS Solutions

The modular HV ESS is specially developed for C&I scenarios. It adopts standardised rack design, with a single module of 5.22kWh, a single cluster of 62.6kWh high-density energy storage units, and support for multiple clusters in parallel to expand to megawatt-level capacity. The system is equipped with intelligent BMS and active safety protection system, realising three-level over-voltage/over-temperature/short-circuit protection to meet the harsh deployment requirements of indoor environments.



- 26.1kWh - 313.3kWh Capacity Range
- 224.0V - 672.0V Voltage Range
- Cobalt Free Lithium Iron Phosphate (LFP) Battery
- Built-In Fire Protection System (Optional)
- Max.5 ESS-BATT R60 In Parallel
- Modular Design, Plug And Play
- 1C Rated @ Max. Charge/Discharge
- 10 Years Warranty, > 6000 Cycles

System Demonstration

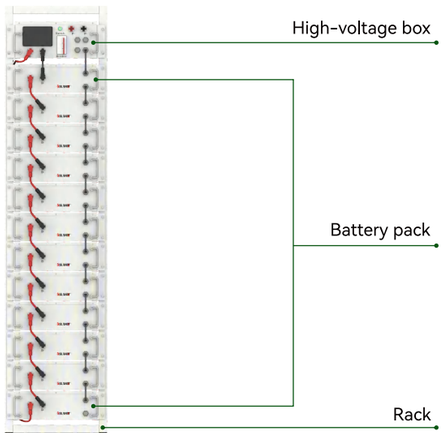

System Layout

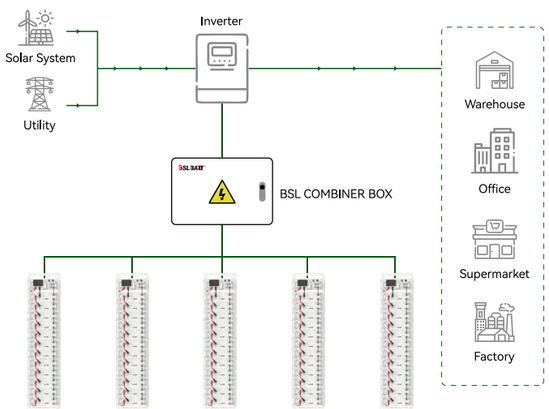

Model	ESS-BATT R60
Battery Pack	
Cell Capacity	3.2V 102Ah
Cell Chemistry	Lithium Iron Phosphate (LiFePO4)
Configuration	1P16S
Rated Voltage	51.2V
Rated Current	50A
Rated Energy	5.22kWh
Max. Charge/Discharge Rate	≤1C
Single Pack Weight	42kg ±1%
Cooling Method	Natural Cooling
Battery Cluster Specifications	
Number of Packs	12
System Rated Voltage	614.4V
Operating Voltage Range	537.6 ~ 672.0V
System Rated Energy	62.6kWh
Max. Charging Current	100A（25±2℃）
Max. Discharging Current	100A（25±2℃）
Cycle Life	> 6000 cycles (80% DOD @25℃, 0.5C)
Environmental & Safety	
Operating Temperature	-20℃~55℃
Storage Temperature	0℃~35℃
Operating Humidity	10%~90%RH (No Condensation)
Altitude	3000m
Installation Environment	Indoor
Fire Protection (Pack)	Optional
Communication Protocol	CAN/ModBus
Ingress Protection (IP)	IP20
Physical Specifications	
Dimensions(W*D*H,mm)	500*566*2139（±5）
Weight	590 kg ±3%
Warranty	10 years
Battery Life	≥15 years

Note: Parameters can be adjusted according to customer requirements

ESS-BATT RE Series

High Voltage ESS Solutions

The modular HV ESS is specially developed for C&I scenarios. It adopts standardised rack design, with a single module of 9.75kWh, a single cluster of 107kWh high-density energy storage units, and support for multiple clusters in parallel to expand to megawatt-level capacity. The system is equipped with inteligent BMS and active safety protection system, realising three-level over-voltage/over-temperature/short-circuit protection to meet the harsh deployment requirements of indoor environments.



- 48.8kWh - 536.5kWh Capacity Range
- 336.0V - 924.0V Voltage Range
- Cobalt Free Lithium Iron Phosphate (LFP) Battery
- Built-In Fire Protection System (Optional)
- Max.5 ESS-BATT RE In Parallel
- Modular Design, Plug And Play
- 1C Rated @ Max. Charge/Discharge
- 6 Years Warranty, > 4000 Cycles

System Demonstration

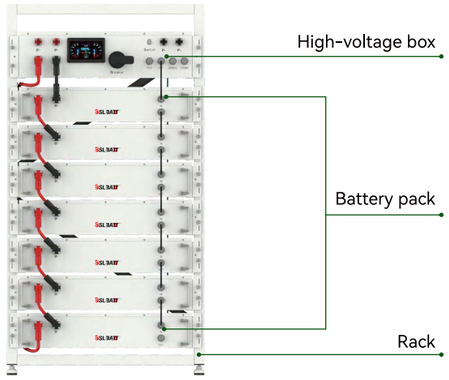

System Layout

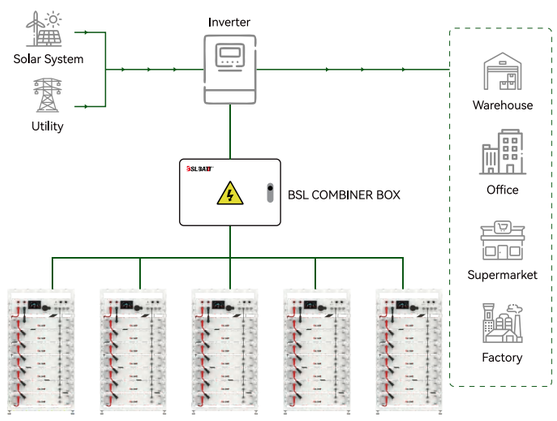

Model	ESS-BATT RE Series			
Battery Pack				
Cell Capacity	3.2V 127Ah			
Cell Chemistry	Lithium Iron Phosphate (LiFePO4)			
Configuration	1P24S			
Rated Voltage	76.8V			
Rated Current	42.4A			
Rated Energy	9.75kWh			
Cooling Method	Natural Cooling			
Dimension(W*D*H,mm)	740*645*135(±5)			
Weight	70kg±3%			
Battery Cluster Specifications				
Battery Model	RE5	RE7	RE9	RE11
Number of Packs	5	7	9	11
System Rated Voltage	384V	537.6V	691.2V	844.8V
Operating Voltage Range	336.0V ~ 420.0V	470.4V ~ 588.0V	604.8V ~ 756.0V	739.2V ~ 924.0V
System Rated Energy	48.8kWh	68.3kWh	87.8kWh	107.3kWh
Rated Charge/Discharge Current	42.4A			
Cycle Life	Fast Charge Cycles >4000 (80% Depth of Discharge @25° C)			
General parameters				
Operating Temperature	-20℃~55℃			
Storage Temperature	0℃~35℃			
Operating Humidity	10%~90%RH (No Condensation)			
Altitude	3000m			
Installation Environment	Indoor			
Fire Protection (Pack)	Optional			
Communication Protocol	CAN/ModBus			
Ingress Protection (IP)	IP20			
Dimension(W*D*H,mm)	764*740*1140(±5)	764*740*1440(±5)	764*740*1740(±5)	764*740*2040(±5)
Weight	450kg±3%	590kg±3%	730kg±3%	870kg±3%

ESS-BATT RX

High Voltage ESS Solutions

The modular high-voltage energy storage system is specially developed for industrial and mining enterprisescenarios. It adopts a standardized rack design, with a single module capacity of 7 .83kWh. A single clustersupports up to 23 battery packs in series, achieving a maximum storage capacity of 180kWh. The system isequipped with an intelligent BMS and an active safety protection system to achieve three-level protectionfor overvoltage/overtemperature/short circuit, meeting the deployment requirements of harsh indoorenvironments.



- 54.8kWh - 536.5kWh Capacity Range
- 235.2V - 966.0V Voltage Range
- Cobalt Free Lithium Iron Phosphate (LFP) Battery
- Built-In Fire Protection System (Optional)
- Max.5 ESS-BATT RX In Parallel
- Modular Design, Plug And Play
- 1C Rated @ Max. Charge/Discharge
- 10 Years Warranty, > 6000 Cycles

System Demonstration

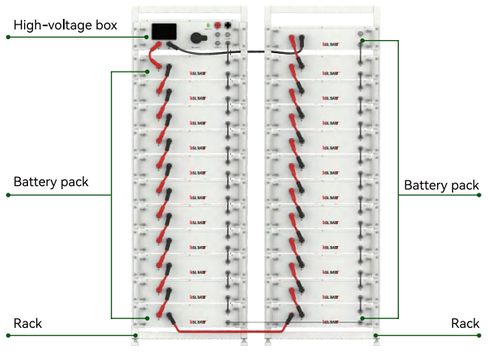

System Layout

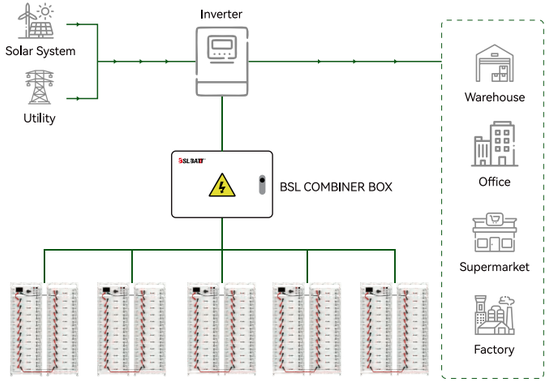

Model	ESS-BATT RX			
Battery Pack				
Cell Capacity	3.2V 102Ah			
Cell Chemistry	Lithium Iron Phosphate (LiFePO4)			
Configuration	2P12S			
Rated Voltage	38.4V			
Rated Capacity	204Ah			
Rated Energy	7.83kWh			
Max. Charge/Discharge Rate	≤1C			
Cooling Method	Natural Cooling			
Single Pack Size (W*D*H,mm)	660*574*140(±5)			
Single Pack Weight	63kg ±1%			
Battery Cluster Specifications				
Battery Model Number	RX7	RX12	RX17	RX21
Number of Packs	7	12	17	21
System Rated Voltage	268.8V	460.8V	652.8V	806.4V
Operating Voltage Range	235.2V ~ 294.0V	403.2V ~ 504.0V	571.2V ~ 714.0V	705.6V ~ 882.0V
System Rated Energy	54.8kWh	94.0kWh	133.2kWh	164.5kWh
Max. Charging Current	200A			
Max. Discharging Current	200A			
Cycle Life	> 6000 cycles (80% DOD @25℃, 0.5C)			
Environmental & Safety				
Operating Temperature	-20℃~55℃			
Storage Temperature	0℃~35℃			
Operating Humidity	10%~90%RH (No Condensation)			
Altitude	3000m			
Installation Environment	Indoor			
Fire Protection (Pack)	Optional			
Communication Protocol	CAN/ModBus			
Ingress Protection (IP)	IP20			
Physical Specifications				
Dimensions (W*D*H,mm)	680*618*1993(±10)		1460*618*1993(±10)	
Weight	516kg±3%	831kg±3%	1196kg±3%	1460kg±3%
Warranty	5 years			
Battery Life	≥15 years			

Note: For inverter compatibility, it is recommended to limit the system to 21 battery packs.
The product height can be modified according to the reasonable requirements of the customer.

ESS-GRID Station Series

Designed for indoor use, C&I battery systems

Designed for “behind-the-meter” microgrids, C&I energy backup, solar farms, community power generation, electric vehicle charging, and data center applications, the ESS-GRID Station series features a master-slave mechanism multi-tier battery management system (BMS) that monitors, optimizes, and proactively balances the system.



- 105.0kWh - 1679.4kWh Capacity Range
- 448.0V - 908.8V Voltage Range
- Cobalt Free Lithium Iron Phosphate (LFP) Battery
- Built-In Fire Protection System (Optional)
- Customized For Your Energy Needs
- Modular Design, Plug And Play
- 1C Rated @ Max. Charge/Discharge
- 10 Years Warranty, > 6000 Cycles
- Max.10 ESS-GRID S205 In Parallel Configure BAU

ESS-GRID	S205-10	S205-11	S205-12	S205-13	S205-14	S205-15	S205-16
Rated Voltage(V)	512.0	563.2	614.4	665.6	716.8	768.0	819.2
Rated Capacity(Ah)	205						
Cell Model(LFP-3.2V)(Ah)	205						
System Configuration	160S1P	176S1P	192S1P	208S1P	224S1P	240S1P	256S1P
Rate Power(kWh)	105.0	115.5	126.0	136.4	146.9	157.4	167.9
Charge Upper Voltage(V)	568.0	624.8	681.6	738.4	795.2	852.0	908.8
Discharge Lower Voltage(V)	448.0	492.8	537.6	582.4	627.2	672.0	716.8
Recommended Current(A)	102.5						
Max. Charging Current(A)	200						
Max. Discharging Current(A)	200						
Dimensions (W*D*H,mm)	High Voltage Control Box	515*721*270（±10）					
	Single Battery Pack	515*721*270（±10）					
Number of Series	10	11	12	13	14	15	16
Communication Protocol	CAN BUS / Modbus RTU						
Host Software Protocol	CANBUS (Baud rate @500Kb/s or 250Kb/s)						
Operation Temperature Range	Charge:0~55℃						
	Discharge: -20~55℃						
Cycle Life(25℃)	>6000 cycles @80% DOD						
Protection Level	IP20						
Storage Temperature	0℃~35℃						
Storage Humidity	10%~90%RH (No Condensation)						
Internal Impedance	≤1Ω						
Warranty	10 years						
Battery Life	≥15 years						
Weights	907kg±3%	992kg±3%	1093kg±3%	1178kg±3%	1263kg±3%	1348kg±3%	1433kg±3%

Note: Parameters can be adjusted according to customer requirements

System Demonstration

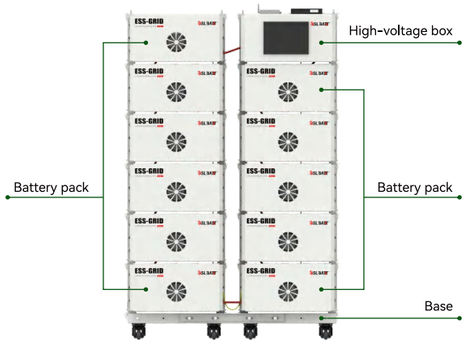

System Layout

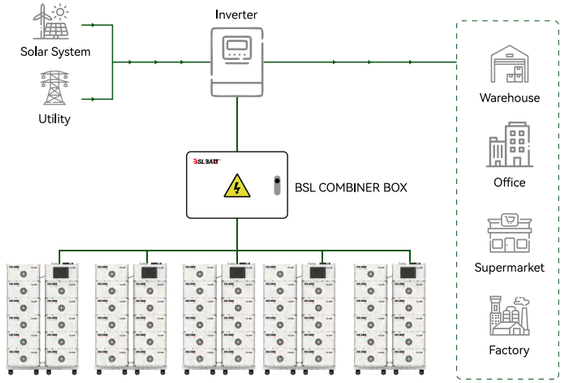



S205 Battery Pack



S205 Battery Rack



10*S205 Battery Rack

ESS-GRID Station Series

Designed for indoor use, C&I battery systems

Designed for “behind-the-meter” microgrids, C&I energy backup, solar farms, community power generation, electric vehicle charging, and data center applications, the ESS-GRID Station series features a master-slave mechanism multi-tier battery management system (BMS) that monitors, optimizes, and proactively balances the system.



- 160.8kWh - 2572.3kWh Capacity Range
- 448.0V - 908.8V Voltage Range
- Cobalt Free Lithium Iron Phosphate (LFP) Battery
- Built-In Fire Protection System (Optional)
- Customized For Your Energy Needs
- Modular Design, Plug And Play
- 1C Rated @ Max. Charge/Discharge
- 10 Years Warranty, > 6000 Cycles
- Max.10 ESS-GRID S314 In Parallel Configure BAU

System Demonstration

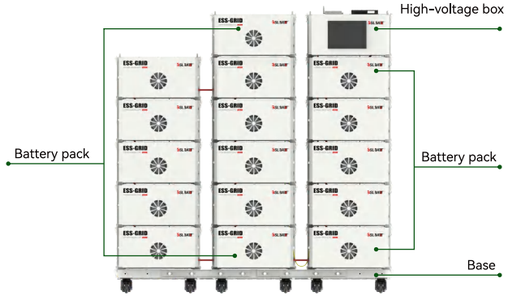

System Layout

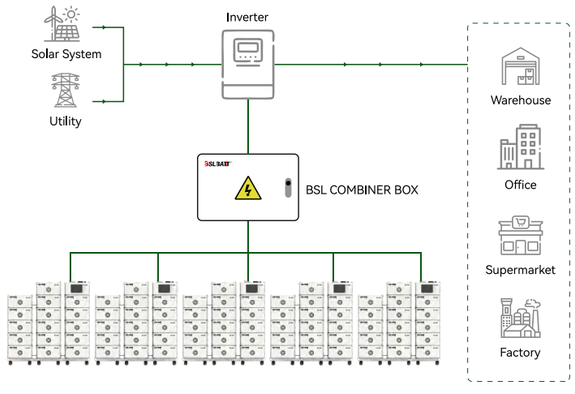

ESS-GRID	S314-10	S314-11	S314-12	S314-13	S314-14	S314-15	S314-16
Rated Voltage(V)	512.0	563.2	614.4	665.6	716.8	768.0	819.2
Rated Capacity(Ah)	314						
Cell Model(LFP-3.2V)(Ah)	314						
System Configuration	160S1P	176S1P	192S1P	208S1P	224S1P	240S1P	256S1P
Rate Power(kWh)	160.8	176.8	193.0	209.0	225.1	241.2	257.2
Charge Upper Voltage(V)	568.0	624.8	681.6	738.4	795.2	852.0	908.8
Discharge Lower Voltage(V)	448.0	492.8	537.6	582.4	627.2	672.0	729.6
Recommended Current(A)	157						
Max. Charging Current(A)	157						
Max. Discharging Current(A)	157						
Dimension(W*D*H,mm)	High Voltage Control Box	515*846*270(±10)					
	Single Battery Pack	515*846*270(±10)					
Number of Series	10	11	12	13	14	15	16
Communication Protocol	CAN BUS / Modbus RTU						
Host Software Protocol	CANBUS (Baud rate @500Kb/s or 250Kb/s)						
Operation Temperature Range	Charge:0~55℃						
	Discharge: -20~55℃						
Cycle Life(25℃)	>6000 cycles @80% DOD 0.5C						
Protection Level	IP20						
Storage Temperature	0℃~35℃						
Storage Humidity	10%~90%RH (No Condensation)						
Internal Impedance	≤1Ω						
Warranty	10 years						
Battery Life	≥15 years						
Weights(KG) (Subject to actual shipment)	1240kg±3%	1356kg±3%	1497kg±3%	1613kg±3%	1730kg±3%	1864kg±3%	1963kg±3%

Note: Parameters can be adjusted according to customer requirements



S314 Battery Pack

S314 Battery Rack

10*S314 Battery Rack

ESS-BATT NX77

High Voltage ESS Solutions From kWH To Mwh

The ESS-BATT NX77 is specially developed for C&I applications to meet the long-term power supply needs of small and medium-sized commercial, industrial and microgrid scenarios. The capacity of a single battery module is 7.83kWh, and a single cluster of high-density energy storage units can reach 78.3kWh. It also supports parallel expansion of multiple clusters, allowing for the flexible construction of megawatt-class energy storage systems.



- More Than 6000 Cycles
- Maximum 1C Charge/Discharge
- 30% Space-intensive Design
- IP55 for indoor Installation

System Demonstration

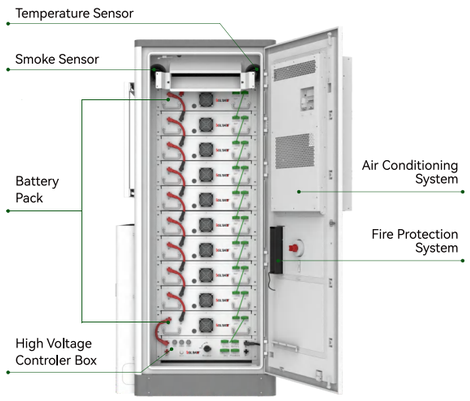

System Layout

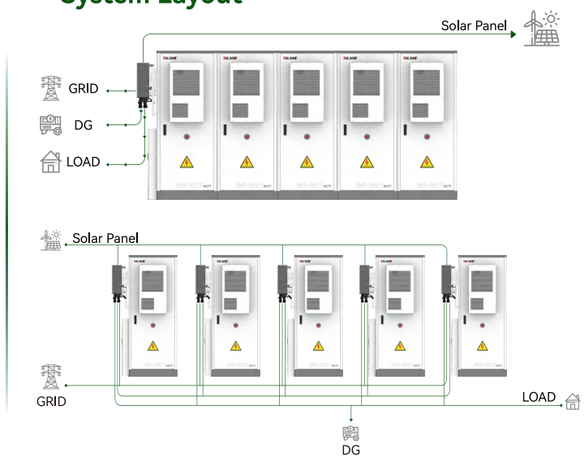

Model	ESS-BATT NX77
Battery Pack	
Cell Capacity	3.2V 102Ah
Cell Chemistry	Lithium Iron Phosphate (LFP)
Configuration	1P24S
Nominal Voltage	76.8V
Nominal Current	50A
Nominal Energy	7.83kWh
Max. Charge/Discharge Rate	≤1C
Single Pack Weight	62kg±1%
Cooling Method	Air Cooling
Battery Cluster	
Number of Battery Packs	10
System Nominal Voltage	768V
Operating Voltage Range	672.0V ~ 840.0V
System Nominal Energy	78.3kWh
Max. Charging Current	100A(25±2℃)
Max. Discharging Current	100A(25±2℃)
Cycle Life	>6,000 cycles (80% DOD @25℃, 0.5C)
Environmental & Operational	
Operating Temperature	-20℃~55℃
Storage Temperature	0℃~35℃
Humidity Range	10%~90%RH (No Condensation)
Altitude Limit	3000m
Installation Environment	Outdoor
Temperature Control	Industrial-grade air conditioning
Thermal Runaway Suppression	Supported
Auxiliary Power Supply	AC220V
Communication Protocol	CAN/ModBus
Mechanical & Safety	
Protection Rating	IP55
Dimensions (W*D*H,mm)	928*1072 *2000(±5)
Weight	1050kg±3% (Without inverter)
Service Life	≥15 years
Warranty	10 years

Note: Parameters can be adjusted according to customer requirements

ESS-BATT Cubicon Lite

High Voltage ESS Solutions From kWH To Mwh

The ESS-BATT Cubicon Lite is a new choice for industrial and commercial DC energy storage systems. Continuing the high-perrormance heritage of the Cubicon series, it delivers higher energy density in a smaller package.
Powered by 205Ah lithium iron phosphate cells, it offers ffexible capacity conffgurations from 105 to 157 kWh. Featuring built-in EMS intelligent management and remote monitoring, it easily adapts to 30kW+ three-phase energy storage inverrers.
With an IP55 rating, it offers safety, reliability, and ffexible installation, making it an ideal solution for efffcient energy storage in diverse scenarios.

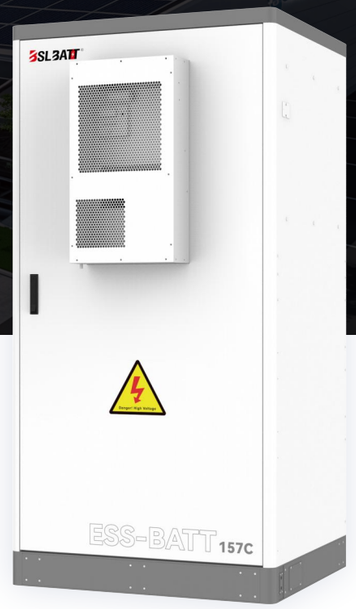

- More Than 6000 Cycles
- Maximum 1C Charge/Discharge
- 30% Space-intensive Design
- IP55 for Outdoor Installation
- Max.10 ESS-BATT Cubicon Lite In Parallel（Configure BAU）

System Demonstration

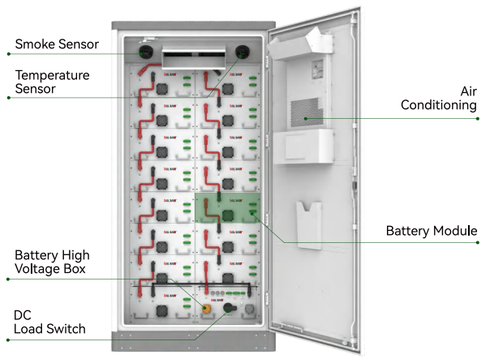

System Layout



Model	ESS-BATT Cubicon Lite	
Battery Pack		
Cell Type	Lithium Iron Phosphate (LFP)	
Cell Capacity	205Ah	
Combination Method	1P16S	
Rated Voltage	51.2V	
Rated Capacity	205A	
Rated Energy	10.49kWh	
Max. Charge/Discharge Rate	≤1C	
Dimensions (W*D*H,mm)	470*674*227(±5)	
Weight	85kg±1%	
Battery Cluster		
Battery Model	ESS-BATT 146C Lite	ESS-BATT 157C Lite
Number of Battery Packs	14	15
System Rated Capacity	205Ah	
System Rated Voltage	716.8V	768.0V
Operating Voltage Range	627.2V ~ 795.2V	627.2V ~ 852.0V
System Rated Power	146.9kWh	157.4kWh
Rated Charge/Discharge Current	105.5A (25±2℃)	
Rated Charge/Discharge Power	73.5kW (0.5P,25±2℃)	78.7kW (0.5P，25±2℃)
Max. Charge/Discharge Current	200A (25±2℃)	
Cycle Life	>6,000 cycles (80% DOD @25℃, 0.5C)	
Environmental & Operational		
Operating Temperature	-20℃~55℃	
Humidity Range	10%~90%RH (No Condensation)	
Storage Temperature	0℃~35℃	
Altitude Limit	3000m	
Installation Environment	Outdoor	
Cooling Mode	Industrial-grade air conditioning	
Firefighting	Hot-air aerosol	
Communication Protocol	CAN/ModBus	
Protection Level	IP55	
Dimensions (W*D*H,mm)	1150*1172*2300 (±5)	
Weight	1765kg±3%	1850kg±3%
Warranty	10 Years	

*This product is flexible to match, the number of battery packs in the battery cabinet can be freely combined between 10 and 15.

ESS-BATT Cubicon Series

The Ultimate Battery Solution for Large-scale Applications

The BSLBATT DC battery cabinet, with a large 215kWh energy storage capacity, is designed specifically for industrial and commercial applications. It utilizes highly safe $LiFePO_4$ cells and an intelligent energy management system to ensure long-term stable and efficient operation. Its modular DC design not only facilitates expansion and system integration, but also offers flexible adaptation to various industrial and commercial scenarios, providing businesses with reliable energy storage support, helping to optimize energy costs and achieve a green, low-carbon transition.

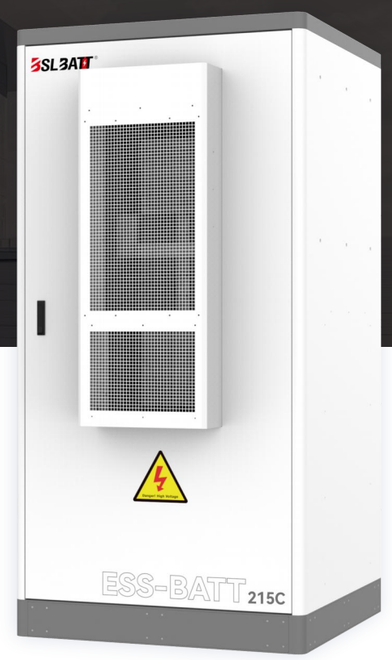

- Huge Energy Capacity, 200kWh - 215kWh
- Modular Design And Scalability
- High Energy Density, 280Ah Battery Cell
- Advanced LFP Technology
- Built-In Fire Protection System
- Intelligent Temperature Control System
- IP55 Safety Protection Level
- 10 Years Warranty, > 6000 Cycles
- Max.10 ESS-BATT Cubicon Series In Parallel (Configure BAU)

System Demonstration

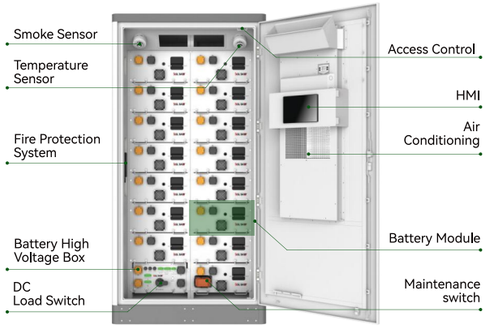

System Layout



Model	ESS-BATT-200C	ESS-BATT-215C
Series and Parallel	16S1P*14=224S1P	16S1P*15=240S1P
Cooling Method	Air-cooling	
Rated Capacity	280Ah	
Rated Voltage	DC716.8V	DC768.0V
Operating Voltage Range	627.2V ~ 795.2V	672.0V ~ 852.0V
Cell Capacity	200.7kWh	215.0kWh
Rated Charge Current	140A	
Rated Discharge Current	140A	
Max. Charge/Discharge Current	200A(25±2℃)	
Protection Level	IP55	
Firefighting Configuration	Hot-air aerosol	
Discharge Temp.	-20℃~55℃	
Charge Temp.	0℃~55℃	
Humidity Range	10%~90%RH (No Condensation)	
Altitude Limit	3000m	
Storage Temp.	0℃~35℃	
Cycle Life	> 6000 Cycles (80% DOD @25℃ 0.5C)	
Dimensions (W*D*H,mm)	1150*1282*2300(±5)	
Weight(With Batteries Approx.)	2210kg±3%	2300kg±3%
Operating Temp.	-20℃~55℃	
Communication Protocol	CAN/ RS485 ModBus / RTU	
Noise Level	70dB	
Functions	Pre-charge, Over-Less Voltage/Over-Less Temperature Protection, Cells Balancing/SOC-SOH Calculation etc.	
Certifications	UN 38.3	

Note: The above models are typical con gurations, and can also be used for micro-grid and other scenarios with optional photovoltaic charging modules, switching modules, industrial frequency transformers and other components, integrated optical storage, and integrated system cabinets.

ESS-BATT Cubicon Series

The Ultimate Battery Solution for Large-scale Applications

The BSLBATT DC battery cabinet, with a large 241kWh energy storage capacity, is designed specifically for industrial and commercial applications. It utilizes highly safe $LiFePO_4$ cells and an intelligent energy management system to ensure long-term stable and efficient operation. Its modular DC design not only facilitates expansion and system integration, but also offers flexible adaptation to various industrial and commercial scenarios, providing businesses with reliable energy storage support, helping to optimize energy costs and achieve a green, low-carbon transition.

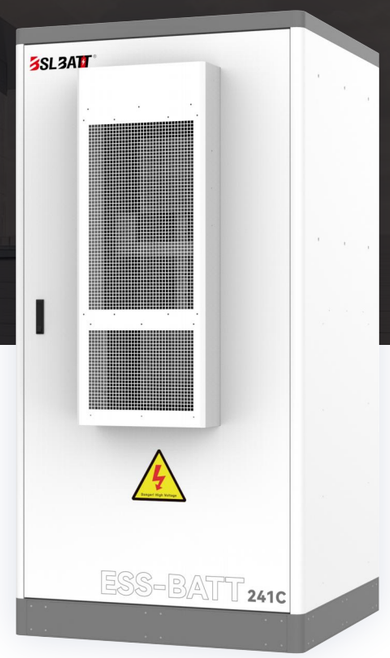

- Huge Energy Capacity, 225kWh - 241kWh
- Modular Design And Scalability
- High Energy Density, 314Ah Battery Cell
- Advanced LFP Technology
- Built-In Fire Protection System
- Intelligent Temperature Control System
- IP55 Safety Protection Level
- 10 Years Warranty, > 6000 Cycles
- Max.10 ESS-BATT Cubicon Series In Parallel (Configure BAU)

System Demonstration

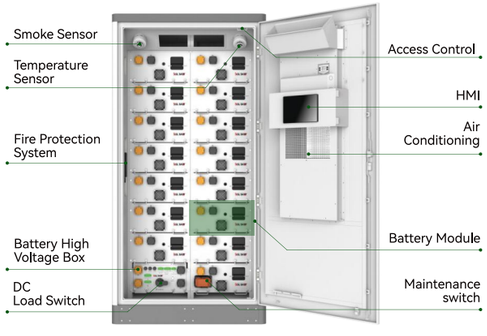

System Layout



Model	ESS-BATT-225C	ESS-BATT-241C
Series and Parallel	16S1P*14=224S1P	16S1P*15=240S1P
Cooling Method	Air-cooling	
Rated Capacity	314Ah	
Rated Voltage	DC716.8V	DC768.0V
Operating Voltage Range	627.2V ~ 795.2V	672.0V ~ 852.0V
Cell Capacity	225.0kWh	241.1kW
Rated Charge Current	157A	
Rated Discharge Current	157A	
Max. Charge/Discharge Current	200A(25±2℃)	
Protection Level	IP55	
Firefighting Configuration	Pack level + Aerosol	
Discharge Temp.	-20℃~55℃	
Charge Temp.	0℃~55℃	
Humidity Range	10%~90%RH (No Condensation)	
Altitude Limit	3000m	
Storage Temp.	0℃~35℃	
Cycle Life	> 6000 Cycles (80% DOD @25℃ 0.5C)	
Dimensions (W*D*H,mm)	1150*1282*2300(±5)	
Weight(With Batteries Approx.)	2247kg±3%	2360kg±3%
Operating Temp.	-20℃~55℃	
Communication Protocol	CAN/ RS485 ModBus / RTU	
Noise Level	70dB	
Functions	Pre-charge, Over-Less Voltage/Over-Less Temperature Protection, Cells Balancing/SOC-SOH Calculation etc.	
Certifications	UN 38.3 / IEC62619 / IEC62477 / IEC62040 / IEC61000 / CE	

Note: The above models are typical con gurations, and can also be used for micro-grid and other scenarios with optional photovoltaic charging modules, switching modules, industrial frequency transformers and other components, integrated optical storage, and integrated system cabinets.

Integrated solution with C&I 3-phase inverter

Our DC outdoor cabinets can be integrated with well-known industrial and commercial inverters on the market. BSLBATT can provide a complete set of integration solutions to our users.





60-80kW 30-50kW



29.9-50kW 75-125kW



30-50kW

M-Power Station

Powering the Future-
Clean. Mobile. Intelligent.

The M-Power S30/69 is a flexible and eco-friendly power solution designed to replace traditional diesel generators.
Equipped with a 30 kw hybrid inverter and 69 kWh LiFePO, battery pack, it supports charging from solar PV, the qrid, or both, delivering reliable power wherever it's needed-without noise or emissions.
Whether used for emergency backup, field operations, or mobile EV charging, this system enables users to enjoy a clean, silent, and intelligent energy supply anytime, anywhere.



- Max. parallel connection of 3, achieving energy resilience
- Maximum 1C Discharge
- 30% Space-intensive Design
- Ip55 for outdoor installation, coping with adverse conditions
- Supports access to multiple energy sources such as PV, Grid, and Dgs.
- Convenient deployment and operation
- UPS functions and supports millisecond-level fast grid-connected/off-grid switching

System Demonstration

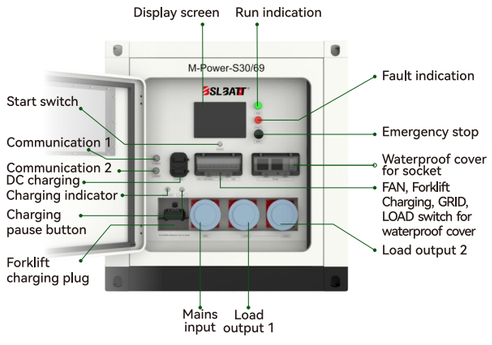

System Layout

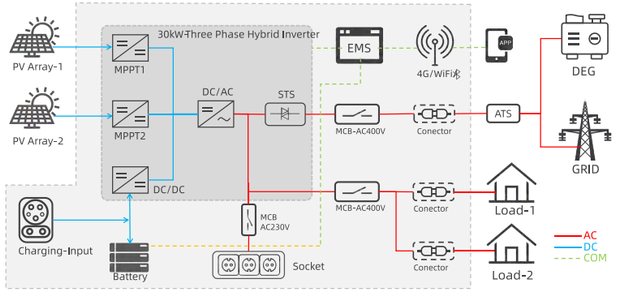

Model	M-Power S30/69
Battery Parameters	
Cell Chemistry	Lithium Iron Phosphate (LiFePO4)
Cell Capacity	3.2V/150Ah
Configuration	1P24S*6S (1P144S)
Rated Power	69.12kWh
Rated Charge/Discharge Power	0.5P (25±2°C)
Max Charge/Discharge Current	150A (25±2°C)
Rated Voltage	460.8V
Operating Voltage Range	403.2V~518.4V
PVParameters(Optional)	
Max. Power	19.2kW+19.2kW
Max. PV Voltage	850V
PV Start-Up Voltage	250V
MPPT Voltage Range	200V~830V
Max. PV Current	32A+ 32A
MPPT Route	2
PCS Parameters	
Rated AC Power	30kW
Max. DC Current	100A
DC Voltage Range	320V~850V
Rated AC Voltage	AC400V/230V
Rated AC Current	43.5A
Rated AC Frequency	50/60Hz(+2Hz)
Power Factor Adjustable Range	-0.8 Ahead~+0.8 Behind
Overload Capacity	110%, Normal Operation; 120%, 1 Min.
External Interface	
125A Three-Phase Quick Connector	3
16A Single-Phase Outlet	2
125A DC Charging Port	1
DCoutput(optional)	
20kW DC Charger	1
General Parameters	
Operating Humidity	10% ~ 90% RH (No Condensation)
Operating Temperature	-20°Cto 55°C (Derating at>45°C)
Storage Temperature	0°C~35°C
Altitude	3000m (>2000m Derating)
Cooling Method	Intelligent Air Cooling
Communication Protocol	RS485 / CAN / RJ45 / DRY / WiFi / 4G
Isolation Method	Non-isolated
Protection Level	IP55
Dimension (W*D*H)	1060*1400*1030 (±5mm)
Weight	1012Kg+3%

ESS-GRID Dynio Series

All-in-one High Voltage Ess Solutions

BSLBATT DyniO is an all-in-one ESS battery storage system that combines a 30kW hybrid inverter, high voltage control box, and 60kWh / 70kWh / 80kWh / 90kWh Li-Ion battery modules for both AC-coupled and DC-coupled systems, allowing you to build your own solar energy storage system faster and easier.



- All-in-one microgrid battery system
- Supports PV, EMS, and off-grid switching
- Multi-unit parallel operation
- Oil-engine hybrid compatibility
- Fast on/off-grid switching
- Wide application: industry, islands, farms, villas, etc.

System Demonstration

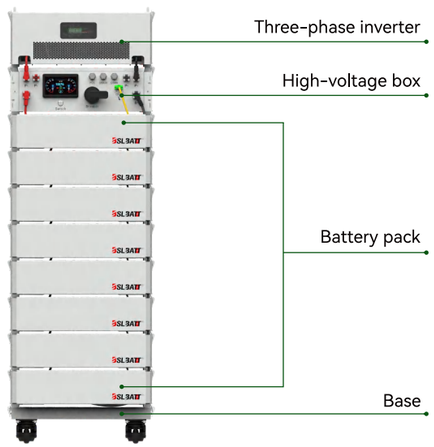

System Layout

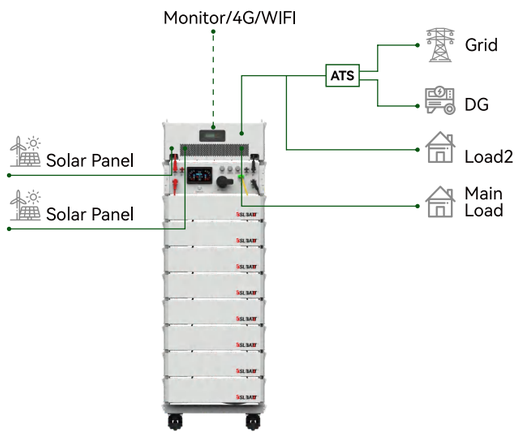

3 Phase Hybrid Inverter



System Parameters	
Communication Port	EMS:RS485 Battery: CAN/RS485
DIDO	DI: 2-way DO: 2-way
Maximum power	97.8%
Installation	Insertion Frame
Loss	Standby <10W, No-load power <100W
Protection	IP20
Temperature Range	-30~60℃
Humidity Range	5~95%
Cooling	Intelligent Forced Air Cooling
Altitude	2000m (90%/80% reduction for 3000/4000 meters respectively)
Inverter Certification	IEC61000/EN50549/IEC62619/ NRS/CE/UN38.3
Battery Certification	IEC62619/IEC62040/IEC62477 CE/UN38.3

Battery Parameters		
Battery Model	HV PACK8	HV PACK5
Number Of Battery Packs	8	5
Rated Voltage (V)	460.8	288
Voltage Range (V)	403.2~504.0	252.0~315.0
Rated Energy (kWh)	62.2	38.9
Rated Current(A)	68	
Cycle Life	6000 Cycles @80% DOD	

PV Parameter		
Inverter Model	INV C30	INV C15
Maximum Power	19.2kW+19.2kW	19.2kW+19.2kW
Maximum PV Voltage	850V	
PV Starting Voltage	250V	
MPPT Voltage Range	200V-830V	
Maximum PV Current	32A+32A	32A+32A

AC Side (Grid-connected)		
Rated Power	30kVA	15kVA
Rated Current	43.5A	22A
Rated Grid Voltage	400V/230V	
Grid Voltage Range	-20%~15%	
Voltage Frequency Range	50Hz/47Hz~52Hz 60Hz/57Hz~62Hz	
Voltage Harmonics	<5% (>30% Load)	
Power Factor	-0.8~0.8	

AC Side (Off-grid)		
Rated Output Power	30kVA	15kVA
Maximum Output Power	33kVA	16.5kVA
Rated Output Current	43.5A	22A
Maximum Output Current	48A	24.2A
Rated Voltage	400V/230V	
Output Voltage Harmonics	< 3% (Resistive Load)	
Unbalance	100%	
Frequency Range	50/60Hz	
Output Overload (Current)	48A < I load ≤54A/100S 54A < I load ≤65A/100S	1.1x continuous / 1.25x 30S / 1.5x 0.1S

System Parameters		
Weight	617kg±3%	407kg±3%
Dimension(W*D*H,mm)	590*713*1795 (±5)	590*713*1345 (±5)

ESS-GRID C109

AIO ESS Cabinet For C&I Applications

ESS-GRID Cabinet integrated system is engineered to meet the vast energy demands of industrial and commercial enterprises. From remote communities in Africa to industrial parks in Europe, the demand for stable and cost-effective energy solutions is growing. The ESS-GRID C109 outdoor battery cabinet is designed to tackle challenges like grid instability, high electricity costs, and renewable energy integration.

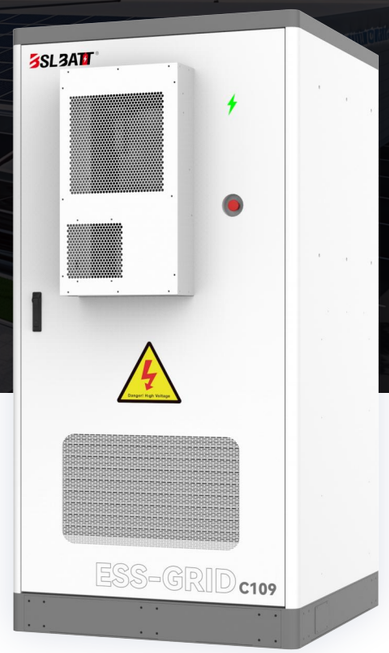

- 50kW / 109kWh Integrated System Design
- Modular Design And Scalability
- Pre-Installed, Saving Installation Time
- Advanced LFP Technology
- Built-In Fire Protection System
- Intelligent Temperature Control System
- IP55 Safety Protection Level
- 10 Years Warranty, > 6000 Cycles

System Demonstration

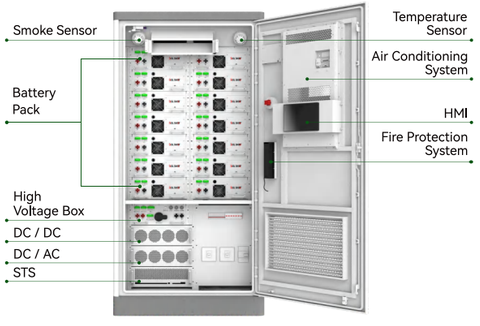

System Layout

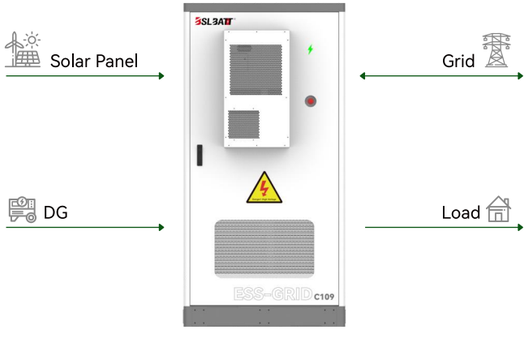

Model	ESS-GRID C109
System Parameter	50kW / 109kWh
Cooling Method	Air-cooled
Battery Parameters	
Rated Battery Capacity	108.9kWh
Rated Battery Voltage	806.4V
Battery Type	Lithium Iron Phosphate Battery (LFP)
Cell Capacity	135Ah
Recommended Max. Charge/Discharge Current	68A
Battery Series-parallel Connection Method	18S1P*14=252S1P
Charge temp./Discharge temp.Method	0~55℃ / -20~55℃
PV Parameters	
Starting Voltage	200V
Max. PV Power	55kW
MPPT Quantity	1
MPPT Voltage Range	250-620V
MPPT Full Load Open Circuit Voltage Range (Recommended)*	345-620V
AC Parameters	
Rated AC Power	50kW
Nominal AC Current Rating	72A
Max. AC Current Rating	79A
Rated AC Voltage	400Vac/230Vac, 3W+N+PE /3W+PE
DC Side Voltage Range	600~1000V (3P3W) / 680~1000V (3P4W)
DC Side Full Load Voltage Range	625~927V (3P3W) / 680~927V (3P4W)
Rated Frequency	50Hz/60Hz(±5Hz)
Total Current Harmonic Distortion (THD)	<3% (Rated Power)
Power Factor Adjustable Range	1 Ahead ~ +1 Behind
General Parameters	
Protection Level	IP55
Fire Protection System	Hot-air aerosol
Isolation Method	Non-isolated
Operating Temperature	-25℃~55℃ (>45℃ derating)
Altitude	3000m
Communication Interface	RS485/CAN/ Etherner
Dimension (W*D*H,mm)	1100*1272*2200(±5)
Weight (With Batteries Approx.)	1540kg±3%
PCS Certification	
Electric Safety	IEC62619/IEC62477/EN62477
EMC (Electromagnetic Compatibility)	IEC61000/EN61000/CE
Grid-connected And Islanded	IEC62116
Energy Efficiency And The Environment	IEC61683/IEC60068

ESS-GRID LC125-261

Liquid Cooling C&I ESS Cabinet

The BSLBATT ESS-GRID LC125-261 commercial and industrial energy storage system utilizes advanced liquid cooling technology for higher energy storage and conversion efficiency. It features multi-level protection (Ip55) and liquid thermal management for enhanced system safety. This commercial and industrial product is specifically designed for grid-connected peak-shaving and valley-shifting applications, and its wide voltage range (1000V) ensures seamless integration with a variety of commercial applications.

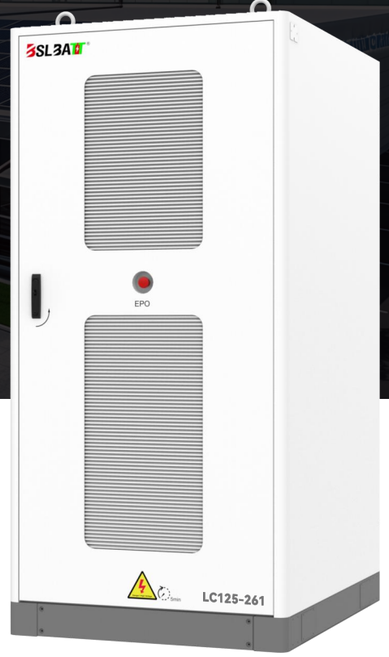

- 125 kW / 261 kWh Integrated System Design
- Modular Design And Scalability
- Pre-Installed, Saving Installation Time
- Advanced LFP Technology
- Built-In Fire Protection System
- Pure On-Grid System, Peak Shaving And Valley Filling
- IP55 Safety Protection Level
- 10 Years Warranty, > 8000 Cycles

System Demonstration

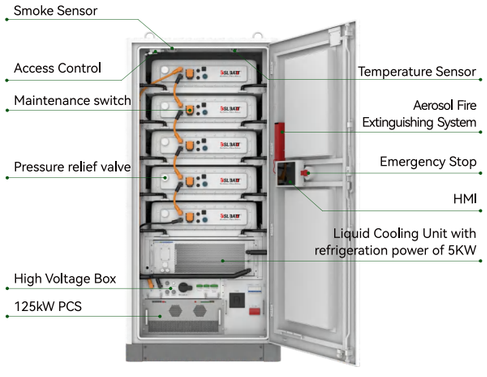

System Layout

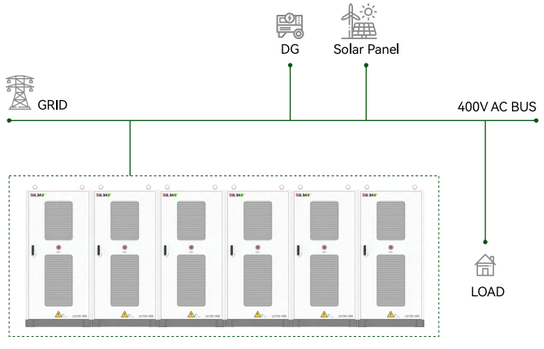

Model	ESS-GRID LC125-261
Battery Parameters	
Rated Capacity	314Ah
Rated Energy	261.2kWh
Battery Type	LiFePO4
PACK Configuration	1P52S
PACK Quantity	1P52S*5S
Rated Voltage	832.0V
Battery Voltage Range	728.0V~923.0V
Rated Charge/Discharge Current	157A
Charging Temperature Range	0℃~55℃
Discharge Temperature Range	-20℃~55℃
AC Parameters (PCS)	
Rated Power	125kW
Maximum Power	137kW
Rated Voltage	400Vac, 3W+PE/3W+N+PE
Rated Frequency	50/60Hz (±5Hz)
Rated Current	180A
Overload Capacity	110%, Normal Operation; 120%, 1 Minute
Current Distortion	THDI <3% (Rated Power)
Power Factor	-1 Overrun ~ +1 Lag
DC Parameters (PCS)	
Rated Power	125kW
Operating Voltage Range	625~927V (3P3W) / 680~927V (3P4W)
Maximum DC Current	200A
General Parameters	
Operating Temperature	-20℃ to 55℃ (Derated for >45℃)
Operating Humidity	10%~90%RH (No Condensation)
Protection Level	IP55
Display	Display & Control All-in-One (Touch Screen)
Cooling Method	PACK Liquid Cooling + PCS Air Cooling
Noise	80dB
Altitude	3000m
Fire Protection	Thermal Aerosol Extinguishing Unit
Communication	Rs485 / CAN / Etherner
Dimensions (W*D*H,mm)	1063*1300*2280(±5)
Weight	2300kg±3%

ESS-GRID Cabinet Series

Air Cooling C&I ESS cabinet

The BSLBATT C241 outdoor C&I ESS cabinet is tailor-made for users seeking efficiency and reliability. This system integrates a 100kW high-performance PCS and supports up to 100kW of PV input, maximizing PV power utilization and energy return at full load. It also features approximately 215kWh of capacity to meet long-term energy storage needs. Its integrated outdoor structure, coupled with a high level of protection, is weather-, sun-, and moisture-resistant, ensuring stable operation even in harsh climates.



- 125 kW / 241 kWh Integrated System Design
- Pre-Wiring Design Reduces Manual Debugging
- Built-In Fire Protection System
- Modular Design And Scalability
- Advanced LFP Technology
- Customized For Your Energy Needs
- IP55 Safety Protection Level
- 10 Years Warranty, > 6000 Cycles

System Demonstration

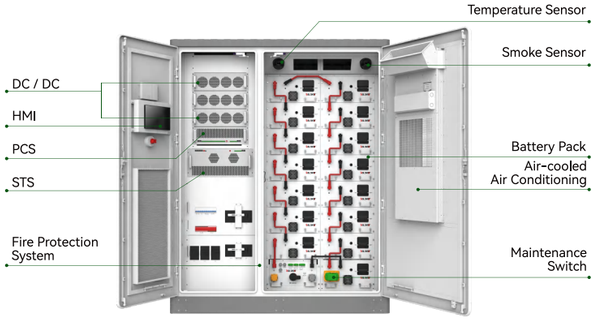

System Layout

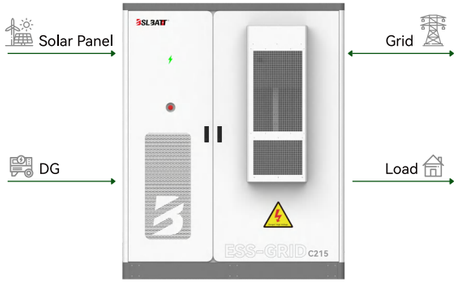

Model	ESS-GRID C200	ESS-GRID C215
System Parameter	100kW / 200kWh	100kW / 215kWh
Cooling Method	Air-cooled	
Battery Parameters		
Rated Battery Capacity	200.7kWh	215.0kWh
Rated System Voltage	716.8V	768.0V
Operating Voltage Range	627.2V ~ 795.2V	672.0V ~ 852.0V
Cell Capacity（LFP）	280Ah	
Rated Charge/Discharge Current	140A	
Battery Series-parallel Connection Method	1P*16S*14S	1P*16S*15S
Charge temp./Discharge temp.Method	0~55℃ / -20~55℃	
PV Parameters (Optional; none /50kW/100kW/150kW)		
Starting Voltage	200V	
Max. PV Power	150kW	
MPPT Quantity	3	
MPPT Voltage Range	250-620V	
MPPT Full Load Open Circuit Voltage Range (Recommended)*	345V-580V	345V-620V
AC Parameters		
Rated AC Power	100kW	
Nominal AC Current Rating	144A	
Max. AC Current Rating	159A	
Rated AC Voltage	400Vac/230Vac ,3W+N+PE /3W+PE	
DC Side Voltage Range	580~1000V (3P3W) / 670~1000V (3P4W)	
DC Side Full Load Voltage Range	625~927V (3P3W) / 680~927V (3P4W)	
Rated Frequency	50Hz/60Hz(±5Hz)	
Total Current Harmonic Distortion (THDI)	<3% (Rated Power)	
Power Factor Adjustable Range	1 Ahead ~ +1 Behind	
General Parameters		
Protection Level	IP55	
Fire Protection System	Hot-air aerosol	
Isolation Method	Isolated (Transformer Optional)	
Operating Temperature	-25℃~60℃ (>45℃ derating)	
Altitude	3000m	
Communication Interface	RS485/CAN/ Etherner	
Dimension (W*D*H,mm)	1850*1430*2300(±5)	
Weight (With Batteries Approx.)	3150kg±3%	3250kg±3%
Certification		
Electric Safety	IEC62619/IEC62477/EN62477	
EMC (Electromagnetic Compatibility)	IEC61000/EN61000/CE	
Grid-connected And Islanded	IEC62116	
Energy Efficiency And The Environment	IEC61683/IEC60068	

ESS-GRID Cabinet Series

Air Cooling C&I ESS cabinet

The BSLBATT C241 outdoor C&I ESS cabinet is tailor-made for users seeking efficiency and reliability. This system integrates a 125kW high-performance PCS and supports up to 150kW of PV input, maximizing PV power utilization and energy return at full load. It also features approximately 241kWh of capacity to meet long-term energy storage needs. Its integrated outdoor structure, coupled with a high level of protection, is weather-, sun-, and moisture-resistant, ensuring stable operation even in harsh climates.



- 125 kW / 241 kWh Integrated System Design
- Pre-Wiring Design Reduces Manual Debugging
- Built-In Fire Protection System
- Modular Design And Scalability
- Advanced LFP Technology
- 1.2X The Photovoltaic Ratio
- IP55 Safety Protection Level
- 10 Years Warranty, > 6000 Cycles

System Demonstration

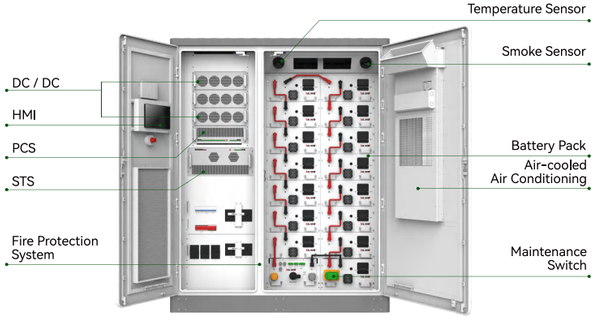

System Layout

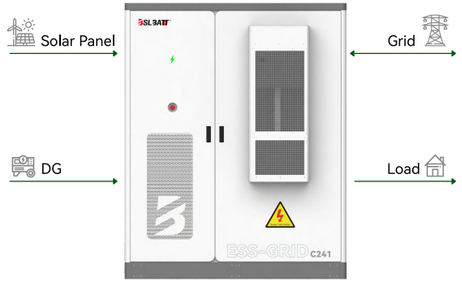

Model	ESS-GRID C225	ESS-GRID C241
System Parameter	125kW / 225kWh	125kW / 241kWh
Cooling Method	Air-cooled	
Battery Parameters		
Rated Battery Capacity	225.0kWh	241.1kWh
Rated System Voltage	716.8V	768.0V
Operating Voltage Range	627.2V ~ 795.2V	672.0V ~ 852.0V
Cell Capacity（LFP）	314Ah	
Rated Charge/Discharge Current	157A	
Battery Series-parallel Connection Method	1P*16S*14S	1P*16S*15S
Charge temp./Discharge temp.Method	0~55℃ / -20~55℃	
PV Parameters (Optional; none /50kW/100kW/150kW)		
Starting Voltage	200V	
Max. PV Power	150kW	
MPPT Quantity	3	
MPPT Voltage Range	250-620V	
MPPT Full Load Open Circuit Voltage Range (Recommended)*	345-580V	345-620V
AC Parameters		
Rated AC Power	125kW	
Nominal AC Current Rating	181A	
Max. AC Current Rating	199A	
Rated AC Voltage	400Vac/230Vac ,3W+N+PE /3W+PE	
DC Side Voltage Range	580~1000V (3P3W) / 670~1000V (3P4W)	
DC Side Full Load Voltage Range	625~927V (3P3W) / 680~927V (3P4W)	
Rated Frequency	50Hz/60Hz(±5Hz)	
Total Current Harmonic Distortion (THDI)	<3% (Rated Power)	
Power Factor Adjustable Range	1 Ahead ~ +1 Behind	
General Parameters		
Protection Level	IP55	
Fire Protection System	Hot-air aerosol	
Isolation Method	Isolated (Transformer Optional)	
Operating Temperature	-25℃~60℃ (>45℃ derating)	
Altitude	3000m	
Communication Interface	RS485/CAN/ Etherner	
Dimension (W*D*H,mm)	1850*1430*2300(±5)	
Weight (With Batteries Approx.)	3197kg±3%	3310kg±3%
Certification		
Electric Safety	IEC62619/IEC62477/EN62477	
EMC (Electromagnetic Compatibility)	IEC61000/EN61000/CE	
Grid-connected And Islanded	IEC62116	
Energy Efficiency And The Environment	IEC61683/IEC60068	

ESS-GRID C241-X120

Turnkey PV-BESS-EV Charging Station

The ESS-GRID C241-X120 is a solar-powered charging facility for electric vehicles. It primarily uses solar panels to collect solar energy and convert it into electricity. This energy is then stored in an energy storage system, providing charging services for electric vehicles when needed. its main components include a solar power generation system, an energy storage system, charging facilities, and a system integration and monitoring system. This solar-powered charging station can be used in a variety of scenarios, such as urban parking lots, highway service areas, and industrial parks.



- **Huge Energy Source**
  241kWh storage system for long-term backup
- **Highly Integrated**
  PV, energy storage, charging station all in one
- **Fast Charging**
  Fast and efficientenergy replenishment
- **Space-saving Design**
  Dual-charger with a compactdesign saves installation space

System Demonstration

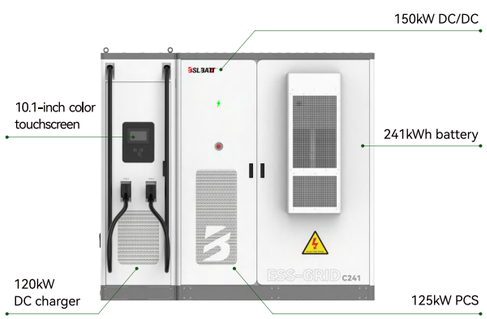

System Layout

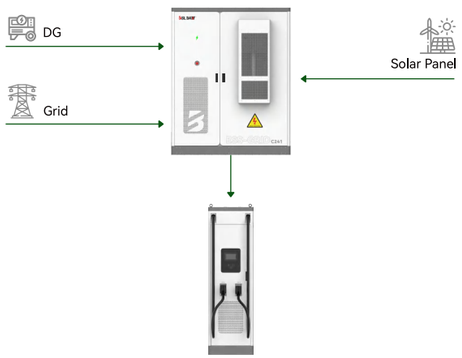

Model	ESS-GRID C241-X120	
Battery Parameters		
Battery Type	Lithium Iron Phosphate Battery (LFP)	
Cell Capacity	3.2V/314Ah	
Combination Method	224S1P	240S1P
Rated Energy	225.0kWh	241.1kWh
Rated Charge/Discharge Power	0.5P(25±2℃)	
Maximum Charge/Discharge Current	200A(25±2℃)	
Rated Voltage	716.8V	768.0V
Operating Voltage Range	627.2V ~ 795.2V	672.0V ~ 852.0V
Photovoltaic Parameters (optional)		
Rated Power	50kW / 100kW / 150kW	
Starting Voltage	200V	
Operating Voltage Range	250V~620V	
MPPT Full Load Voltage Range	345V~580V	345V~620V
Maximum Input Current	(80+80)A*1 / (80+80)A*2 / (80+80)A*3	
Maximum Output Current	110A*1 / 110A*2 / 110A*3	
MPPT Roads	1 / 2 / 3	
PCS Parameters		
Power Rating	125kW	
Maximum DC Current	200A	
DC Side Operating Voltage Range	580~1000V (3W+PE)/ 680~1000V (3W+N+PE)	
DC Side Full Load Operating Voltage Range	625~927V (3P3W) / 680~927V (3P4W)	
Rated AC Voltage	AC400V, 3W+PE/3W+N+PE	
Rated AC Current	180A	
Rated AC Frequency	50/60Hz (±5Hz)	
Power Factor	-1 ahead ~ +1 lagging	
Overload Capability	110%, normal operation; 120%, 1 minute	
Charging Post (optional)		
AC Charging Post	120kW	
General Parameters		
Operating Humidity	10%~90%RH (No Condensation)	
Operating Temperature	-20℃~55℃ (>45℃ derating)	
Storage Temperature	0℃~35℃	
Altitude	3000m	
Cooling Method	Intelligent air-cooled	
Noise	80dB	
Fire Protection	Thermal aerosol fire extinguisher	
Communication	RS485 / CAN / Ethernet	
Isolation Method	Isolation transformer	
Protection Level	IP55	
Dimension (W*D*H,mm)	2563*1500*2350(±10)	
Weight	3587kg±3%	3700kg±3%

ESS-GRID PE Series

125kW - 500kW AC/DC Cabinet

This 500kW PCS cabinet was independently designed by BSLBATT, supporting both on-grid and off-grid operation. Equipped with a transformer and an STS module, it ensures seamless switching within ≤10ms during grid outages. It realizes bidirectional DC/AC conversion and smooth mode transfer, making it ideal for areas with occasional power interruptions. In application, it can convert photovoltaic DC power to AC for load supply or grid sales, store grid AC power as DC in batteries, and instantly switch to battery power during outages. The system also supports AC-side coupling for flexible integration.

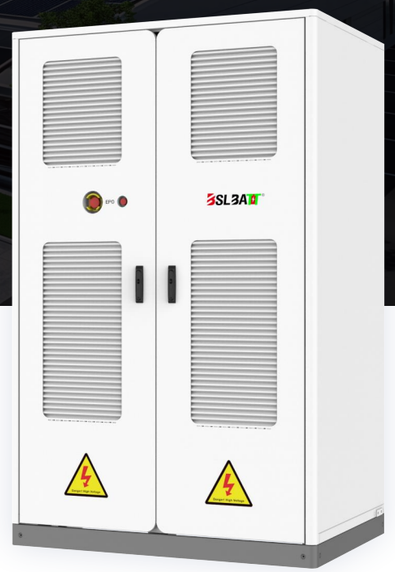

- **Versatile**
  Supports multiple operating modes including PQ, VF, VSG, and MPPT, and features primary frequency/voltage regulation, black start, and multi-unit paralleling.
- **Fast Response**
  Charge/discharge switching is ≤40ms, and response time is <30ms, meeting dispatching and frequency regulation requirements.
- **Easy Maintenance**
  The modular design allows for independent battery operation, facilitating maintenance and expansion.
- **Reliable**
  The built-in power frequency isolation transformer provides strong shock resistance and high safety, making it suitable for off-grid microgrid operation.
- **Efficient**
  The three-level circuit design delivers high conversion efficiency and improved energy utilization.

System Demonstration

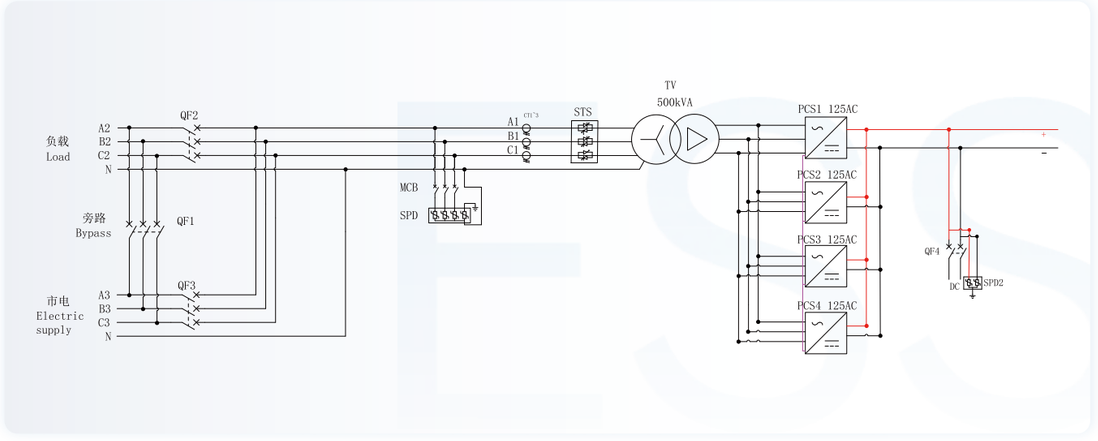

Model		P125E	P250E	P375E	P500E
AC (GRID-CONNECTED)					
AC Side	Rated Grid Voltage	400Vac，3W+PE/3W+N+PE			
	Grid Voltage Range	376Vac ~ 440Vac(Adjustable)			
	Grid Voltage Frequency	50/60±5Hz			
	Rated AC Current	180A	180A*2	180A*3	180A*4
	Rated Power	125kW	250kW	375kW	500kW
	Power Factor	-1 ahead ~ +1 behind			
	Total Current Harmonic Distoion (THDI)	< 3%（Rated Power）			
AC (OFF-GRID)					
Load Side	Load Voltage Rating	400Vac，3W+PE/3W+N+PE			
	Load Voltage Frequency	50/60Hz			
	Overload Capacity	110 % long-term operation; 120 % 1 minute			
	Voltage Total Harmonic Distoion Rate (THDU)	< 3% (Linear loads)			
DC SIDE					
Battery Sides	Input Voltage	625~950V			
	Maximum DC Current	200A	200A*2	200A*3	200A*4
	Rated Power	125kW	250kW	375kW	500kW
SYSTEM PARAMETERS					
Other Parameters	Working Temperature	-25℃~+60℃ (>45℃ derating)			
	Storage Temperature	-20℃ ~ +45℃			
	Allowable Relative Humidity	10%~90%RH (No Condensation)			
	Dimension(W*D*H,mm)	1450*1150*2300(±5)			
	Weight(Indicative)	1450kg±3%	1750kg±3%	2050kg±3%	2450kg±3%
	Protection Class	IP55 (Whole cabinet)			
	Altitude	3000m			
	Communication	RS485 / CAN / Ethernet			
	Cooling Method	Forced air cooling			
	Electrical Isolation	With isolation transformer			

Note: Parameters can be adjusted according to customer requirements

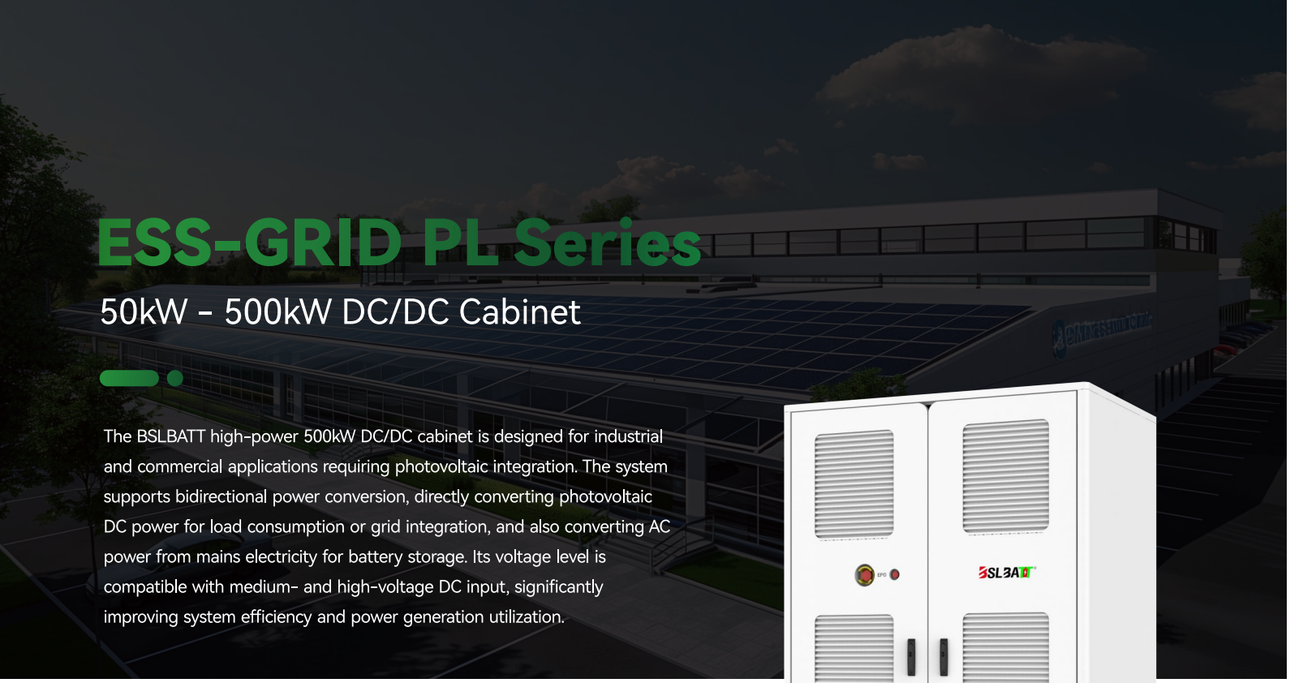

ESS-GRID PL Series

50kW - 500kW DC/DC Cabinet

The BSLBATT high-power 500kW DC/DC cabinet is designed for industrial and commercial applications requiring photovoltaic integration. The system supports bidirectional power conversion, directly converting photovoltaic DC power for load consumption or grid integration, and also converting AC power from mains electricity for battery storage. Its voltage level is compatible with medium- and high-voltage DC input, significantly improving system efficiency and power generation utilization.

- Both photovoltaic charging and energy storage charging and discharging functions;
- Three-level topology, high conversion efficiency;
- Dual interleaved parallel control reducesripple current.

System Demonstration

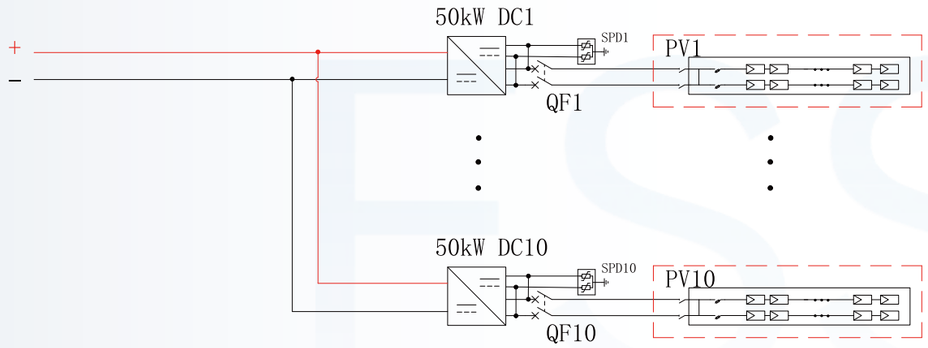

Model	P50L	P100L	P150L	P200L	P250L
PV SIDE					
Staing Voltage	200V				
Operating Voltage Range	250V ~ 620V				
Max. DC Current	160A	320A	450A	640A	800A
Number of MPPTs	1 way	2 ways	3 ways	4 ways	5 ways
Rated Power	50kW	100kW	150kW	200kW	250kW
DC BUS SIDE					
DC Voltage Range	550V~950V				
Max. DC Out Current	110A*1	110A*2	110A*3	110A*4	110A*5
Rated Power	50kW	100kW	150kW	200kW	250kW
SYSTEM PARAMETER					
Working Temperature	-25℃~+60℃ (>45℃ derating)				
Storage Temperature	-20℃ ~ +45℃				
Dimension(W*D*H,mm)	1300*1150*2300(±5)				
Weight(Indicative)	630kg±3%	660kg±3%	690kg±3%	720kg±3%	750kg±3%
Protection Class	IP55(Whole cabinet)				
Altitude	3000m				
Cooling Method	Forced air cooling				
Communication	RS485 / CAN / Ethernet				
Wiring Method	advance or retreat				
Allowable Relative Humidity	10%~90%RH (No Condensation)				
Electrical Isolation	Non-Isolated				

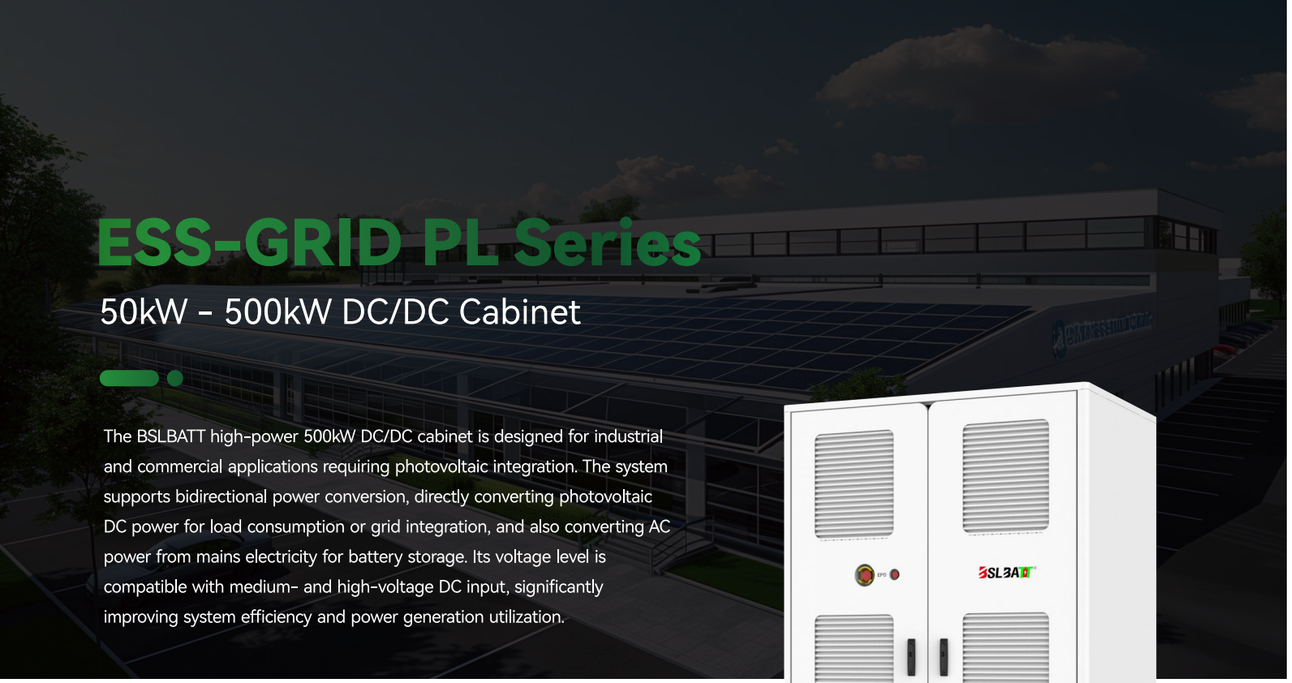

ESS-GRID PL Series

50kW - 500kW DC/DC Cabinet

The BSLBATT high-power 500kW DC/DC cabinet is designed for industrial and commercial applications requiring photovoltaic integration. The system supports bidirectional power conversion, directly converting photovoltaic DC power for load consumption or grid integration, and also converting AC power from mains electricity for battery storage. Its voltage level is compatible with medium- and high-voltage DC input, significantly improving system efficiency and power generation utilization.

- Both photovoltaic charging and energy storage charging and discharging functions;
- Three-level topology, high conversion efficiency;
- Dual interleaved parallel control reducesripple current.

System Demonstration

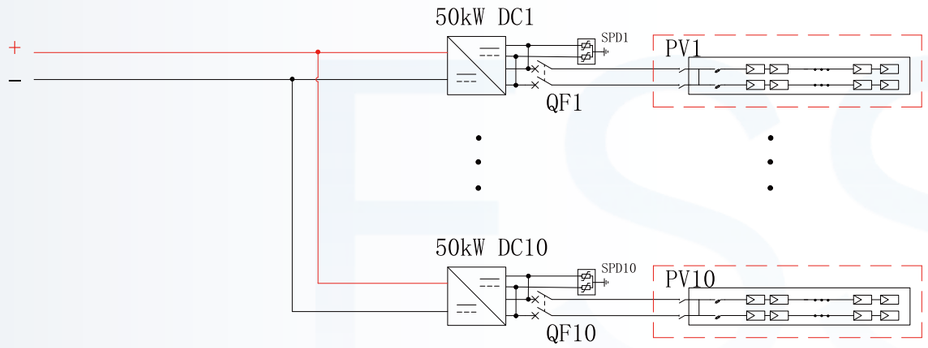

Model	P300L	P350L	P400L	P450L	P500L
PV SIDE					
Staing Voltage	200V				
Operating Voltage Range	250V ~ 620V				
Max. DC Current	960A	1120A	1280A	1440A	1600A
Number of MPPTs	6 ways	7 ways	8 ways	9 ways	10 ways
Rated Power	300kW	350kW	400kW	450kW	500kW
DC BUS SIDE					
DC Voltage Range	550V~950V				
Max. DC Out Current	110A*6	110A*7	110A*8	110A*9	110A*10
Rated Power	300kW	350kW	400kW	450kW	500kW
SYSTEM PARAMETER					
Working Temperature	-25℃~+60℃ (>45℃ derating)				
Storage Temperature	-20℃ ~ +45℃				
Dimension(W*D*H,mm)	1300*1150*2300(±5)				
Weight(Indicative)	780kg±3%	810kg±3%	840kg±3%	870kg±3%	900kg±3%
Protection Class	IP55(Whole cabinet)				
Altitude	3000m				
Cooling Method	Forced air cooling				
Communication	RS485 / CAN / Ethernet				
Wiring Method	advance or retreat				
Allowable Relative Humidity	10%~90%RH (No Condensation)				
Electrical Isolation	Non-Isolated				

Note: Parameters can be adjusted according to customer requirements

ESS-GRID FlexiO Series

2MW / 9.64MWh C&I ESS

The ESS-GRID FlexiO is a split, megawatt-class energy storage system with a flexible modular design, enabling rapid expansion based on project needs. The system supports multiple operating modes, including grid-connected, off-grid, and microgrid, adapting to diverse application scenarios. With its efficient energy conversion and comprehensive safety features, FlexiO provides a stable, reliable, and sustainable energy storage solution for industrial and commercial users and grid operators.



- **Flexible Split-System Architecture**
  The split-system design allows for flexible system configuration based on demand, facilitating transport, installation, and expansion.
- **Megawatt-Class Energy Storage Capacity**
  A single system can be expanded to megawatts, meeting the needs of large industrial and commercial parks, data centers, and grid peak shaving scenarios.
- **Multiple Operation Modes**
  Supports pure grid-connected, off-grid, and microgrid modes, adapting to complex application requirements.
- **Efficient Energy Conversion**
  The bidirectional converter design delivers high energy conversion efficiency, supporting peak shaving, demand response, and renewable energy integration.
- **Future-Proof Compatibility**
  Seamlessly integrates with photovoltaic systems, electric vehicle charging stations, and other energy systems to create a smart energy ecosystem.

System Demonstration

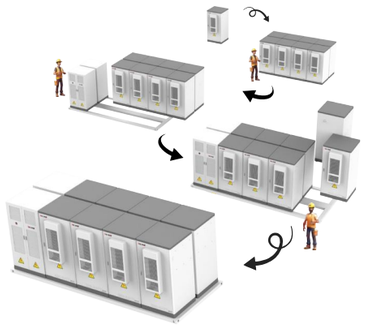

System Layout

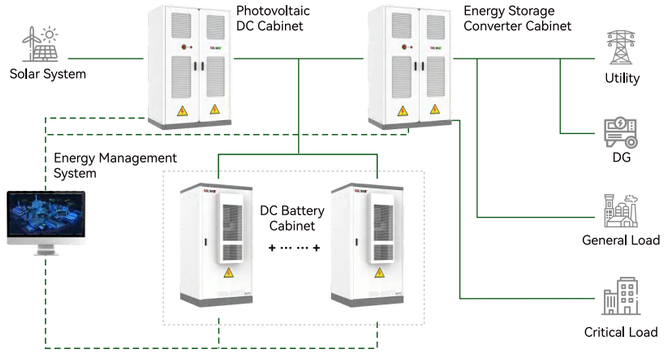

DC PV CABINET	
Model	ESS-GRID P500L
AC (GRID-CONNECTED)	
Photovoltaic (DC/DC) Power Rating	500kW
Operating Voltage Range	250V ~ 620V
PV Maximum DC Current	1600A
Number Of PV MPPT Circuits	10
Protection Grade	IP55
Protection Grade	I
Display	Touch LCD touch screen
Relative Humidity	10~90% RH(Non-Condensing)
Noise Level	Less than 80dB
Ambient Temperature	-25℃~60℃ (Derating above 45℃)
Cooling Method	Intelligent air cooling
EMS Communication	Ethernet / 485/CAN
Dimension (W*D*H,mm)	1300*1150*2300（±5）
Weight (With Battery Approx.)	900kg±3%

BATTERY CABINET PARAMETERS	
Model	ESS-GRID 241C
Rated Battery Capacity	241.1kWh
Rated System Voltage	768.0V
System Voltage Range	672.0V ~ 852.0V
Cell Capacity	314Ah
Battery Type	LiFePO4 battery（LFP）
Battery Series-parallel Connection	1P*16S*15S
Rated Charge/Discharge Current	157A
Protection Grade	IP55
Protection Grade	I
Cooling And Heating Air Conditioning	3kW
Noise Level	70dB
Cooling Method	Intelligent air-cooling
BMS Communication	CAN/485
Dimension (W*D*H,mm)	1150*1282*2300(±5)
Weight (With Battery Approx.)	3310kg ±3%

AC ENERGY STORAGE CABINETS	
Model	ESS-GRID P500E
AC (GRID-CONNECTED)	
PCS Rated AC Power	500kW
PCS Maximum AC Power	550kW
PCS Rated AC Current	720A
PCS Maximum AC Current	790A
PCS Rated AC Voltage	400V，3W+PE/3W+N+PE
PCS Rated AC Frequency	50/60±5Hz
Power Factor	-1 overrun ~ +1 hysteresis
Total Current Harmonic Distoion (THDI)	<3% （Rated Power）
AC (OFF-GRID LOAD SIDE)	
Load Voltage Rating	400Vac，3W+PE/3W+N+PE
Load Voltage Frequency	50/60Hz
Overload Capacity	110% long term operation; 120% 1 minute
Voltage Total Harmonic Distoion Rate THDU	< 3% (linear load)
DC SIDE	
PCS DC Side Voltage Range	625~927V (three-phase three-wire) / 680~927V (three-phase four-wire)
PCS DC Side Maximum Current	800A
SYSTEM PARAMETERS	
Protection Grade	IP55
Protection Grade	I
Isolation Mode	Transformer isolation: 500kVA
Self-consumption	<100W (without transformer)
Display	Touch LCD touch screen
Relative Humidity	10~90% RH(Non-Condensing)
Noise Level	Less than 80dB
Ambient Temperature	-25℃~60℃ (Derating above 45℃)
Cooling Method	Intelligent air cooling
Altitude	3000m
BMS Communication	CAN/485
EMS Communication	Ethernet / 485
Dimension (W*D*H,mm)	1450*1150*2300(±5)
Weight (With Battery Approx.)	2450kg±3%